Proceeding Indonesian Textile Conference
(International Conference)
3rd Edition Volume 1 2019
http://itc.stttekstil.ac.id
ISBN : 978-623-91916-0-3

Modeling of Stress Relaxation and Creep Behaviour of Polyester Yarn used Fitting Data Method by using the Maxwell Model Modification Sequence

Elly Koesneliawati [1*], Abdurrohman [1], and Andrian Wijayno [1]

[1] Politeknik STTT Bandung

* Correspondence: koesnelia@yahoo.com; Tel.: -

Abstract: Textile material especially yarn which is formed by polymer such as polyester has viscoelastic properties when deformation occurs. Viscoelastic is combination of elastic and viscous properties. Many research have been conducted to model viscoelastic on textile materials especially yarn. In this research modeling is done by fitting data through experiments which are then modeled with a theory of the modification of the Maxwell model as a reference in making predictions through the data fitting method. The result of prediction show as exponential curve with regression value that approaches the experimental curve (R^2 = 0,7639 and 0,9997).

Keywords : Viscoelastic; Fitting data; Maxwell Model

ISBN : 978-623-91916-0-3

1. Introduction

Yarn has a blend of elastic and viscous properties when It given a load and deformation towards its length so that it is included in the group of viscoelastic materials. It likened to a series consisting of springs as elastic material and dashpot as viscous material [1]. Viscoelastic can be represented by springs and dashpots. The two simplest forms are shown in Fig. 1 (a, b). Voigt's parallel model shows primary creep at a reducing rate to a limiting value and creep recovery along the inverted form of the same curve. Maxwell's series model shows instantaneous extension and secondary, irrecoverable creep at a constant rate. All the time dependent effects can be covered by three-elements, for example a Voigt model in series with a dashpot. To include all effects, a four element model of Voigt in series with Maxwell is needed[2].

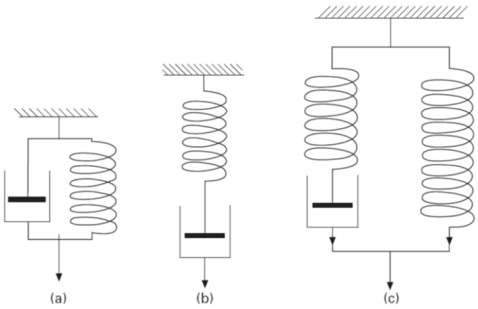

Figure 1. Spring and dashpot models. (a) Voigt Parallel model, (b) Maxwell Series model, (c) Eyring's there-element model with non-linear dashpot.

One way of analyzing the time dependent mechanical behavior is to use linear viscoelastic models composed of one or several elements such as ideal viscous dashpots obeying Newton's law of viscosity and ideal elastic springs obeying Hook's law. Maxwell and Voigt-Kelvin models are such types of models which consist of a single spring and a single dashpot in series and parallel respectively [2]. However, the linear viscoelastic models are restricted to a linear viscoelastic models are restricted to a linear dependence of stress i.e. if all the stress values of a given sequence are doubled, all the strain values will also be doubled [3]. Another model to analyze viscoelastic properties is non-linear viscoelastic. It was developed by Eyring and coworkers, they assume that the deformation of polymer involves the motion of chain molecules or part of chain molecule over potential energy barriers [4,5]. Eyring's model which represented non-linear viscoelastic has weakness that is limited application to the textile materials due to the mathematical rigors involved in the computational works [6-10]. From 3 models of viscoelastic, linear models are the simplest model to use for textile material.

The aim of this research are to obtain prediction model of stress relaxation and creep behavior of polyester yarn using data fitting methods and experiments with existing theory validation. In modeling the modified form of the Maxwell model, it was chosen as a series of forms which are considered to represent the characteristics of the yarn as viscoelastic material.

Maxwell Model

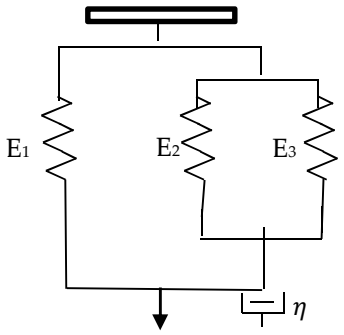

Figure 2. Maxwell series springs and linear models

ISBN : 978-623-91916-0-3
DOI : 10.5281/zenodo.3470873

$$\sigma_E = E\varepsilon \quad (1)$$

$$\varepsilon = \frac{\sigma_E}{E} \quad (2)$$

$$\sigma_\eta = \eta \frac{d\varepsilon}{dt} \quad (3)$$

$$\frac{d\varepsilon}{dt} = \frac{\sigma_\eta}{\eta} \quad (4)$$

Where,

σ_E = stress for spring system (cN/tex)

E = elastic constant

ε = strain (%)

σ_η = stress for dashpot system (cN/tex)

η = viscous constant

t = time (minute)

For parallel spring E_2 and E_3

$$\varepsilon_2 = \varepsilon_3 = \varepsilon_p \quad (5)$$

$$\sum \sigma_p = 0$$

$$\sum \frac{d\sigma_p}{dt} = 0$$

$$\frac{d\sigma_p}{dt} = \frac{d\sigma_2}{dt} + \frac{d\sigma_3}{dt} \quad (6)$$

$$\frac{d\sigma_p}{dt} = E_2 \frac{d\varepsilon_2}{dt} + E_3 \frac{d\varepsilon_3}{dt} \quad (7)$$

Substitute Equation (5) into (7)

$$\frac{d\sigma_p}{dt} = E_2 \frac{d\varepsilon_p}{dt} + E_3 \frac{d\varepsilon_p}{dt}$$

$$\frac{d\sigma_p}{dt} = (E_2 + E_3) \frac{d\varepsilon_p}{dt} \quad (8)$$

$$\frac{d\varepsilon_p}{dt} = \frac{1}{(E_2+E_3)} \frac{d\sigma_p}{dt} \quad (9)$$

For Series spring $(E_2 + E_3)$ and Dashpot

$$\sigma_p = \sigma_\eta = \sigma_s \quad (10)$$

$$\sum \varepsilon_s = 0$$

$$\sum \frac{d\varepsilon_s}{dt} = 0$$

$$\frac{d\varepsilon_s}{dt} = \frac{d\varepsilon_p}{dt} + \frac{d\varepsilon_\eta}{dt} \quad (11)$$

$$\frac{d\varepsilon_s}{dt} = \frac{1}{(E_2+E_3)} \frac{d\sigma_p}{dt} + \frac{\sigma_\eta}{\eta} \quad (12)$$

Substitute Equation (10) into (12)

$$\frac{d\varepsilon_s}{dt} = \frac{1}{(E_2+E_3)} \frac{d\sigma_s}{dt} + \frac{\sigma_s}{\eta} \quad (13)$$

ISBN : 978-623-91916-0-3
DOI : 10.5281/zenodo.3470873

$$\frac{1}{(E_2+E_3)}\frac{d\sigma_s}{dt} = \frac{d\varepsilon_s}{dt} - \frac{\sigma_s}{\eta} \quad (14)$$

$$\frac{d\sigma_s}{dt} = (E_2 + E_3)\left(\frac{d\varepsilon_s}{dt} - \frac{\sigma_s}{\eta}\right) \quad (15)$$

For parallel system between E1 and Series circuit (springs and dashpot)

$$\varepsilon_1 = \varepsilon_s = \varepsilon \quad (16)$$

$$\sum \sigma = 0$$

$$\sum \frac{d\sigma}{dt} = 0$$

$$\frac{d\sigma}{dt} = \frac{d\sigma_1}{dt} + \frac{d\sigma_s}{dt} \quad (17)$$

$$\frac{d\sigma}{dt} = E_1\frac{d\varepsilon_1}{dt} + (E_2 + E_3)\left(\frac{d\varepsilon_s}{dt} - \frac{\sigma_s}{\eta}\right) \quad (18)$$

$$\frac{d\sigma}{dt} = E_1\frac{d\varepsilon_1}{dt} + (E_2 + E_3)\left(\frac{d\varepsilon_s}{dt} - \frac{\sigma-\sigma_1}{\eta}\right)$$

$$\frac{d\sigma}{dt} = E_1\frac{d\varepsilon_1}{dt} + (E_2 + E_3)\frac{d\varepsilon_s}{dt} - (E_2 + E_3)\frac{\sigma}{\eta} + (E_2 + E_3)\frac{\sigma_1}{\eta}$$

$$\frac{d\sigma}{dt} = E_1\frac{d\varepsilon_1}{dt} + (E_2 + E_3)\frac{d\varepsilon_s}{dt} - (E_2 + E_3)\frac{\sigma}{\eta} + (E_2 + E_3)E_1\frac{\varepsilon_1}{\eta} \quad (19)$$

Substitute Equation (16) into (19)

$$\frac{d\sigma}{dt} = E_1\frac{d\varepsilon}{dt} + (E_2 + E_3)\frac{d\varepsilon}{dt} - (E_2 + E_3)\frac{\sigma}{\eta} + (E_2 + E_3)E_1\frac{\varepsilon}{\eta} \quad (20)$$

$$\frac{d\sigma}{dt} + (E_2 + E_3)\frac{\sigma}{\eta} = (E_1 + E_2 + E_3)\frac{d\varepsilon}{dt} + (E_2 + E_3)E_1\frac{\varepsilon}{\eta} \quad (21)$$

$$\frac{\eta}{(E_2+E_3)}\left(\frac{d\sigma}{dt} + (E_2 + E_3)\frac{\sigma}{\eta}\right) = \frac{\eta}{(E_2+E_3)}\left((E_1 + E_2 + E_3)\frac{d\varepsilon}{dt} + (E_2 + E_3)E_1\frac{\varepsilon}{\eta}\right)$$

$$\frac{\eta}{(E_2+E_3)}\frac{d\sigma}{dt} + \sigma = \frac{\eta(E_1+E_2+E_3)}{(E_2+E_3)}\frac{d\varepsilon}{dt} + E_1\varepsilon \quad (22)$$

Equation (22) similar with Maxwell model equation as written in "*Modeling and predicting textile behavior"* book by X.Chen [1] and familiar as Zenner Model Equation.

If it is considered $E_1 + E_2 + E_3 = E$, then the stress-strain equation is as follows.

$$\frac{\eta}{(E_2+E_3)}\frac{d\sigma}{dt} + \sigma = \frac{\eta(E_1+E_2+E_3)}{(E_2+E_3)}\frac{d\varepsilon}{dt} + E_1\varepsilon$$

$$\frac{\eta}{2E}\frac{d\sigma}{dt} + \sigma = E\varepsilon + \frac{3}{2}\eta\frac{d\varepsilon}{dt} \quad (23)$$

To calculate stress relaxation with conditions $\frac{d\varepsilon_s}{dt} = 0$,equation will become as follows.

$$\frac{\eta}{2E}\frac{d\sigma}{dt} + \sigma = E\varepsilon + 0$$

$$\frac{\eta}{2E}\frac{d\sigma}{dt} = E\varepsilon - \sigma$$

$$\frac{d\sigma}{dt} = (E\varepsilon - \sigma)\frac{E}{\eta}$$

$$\frac{d\sigma}{(E\varepsilon-\sigma)} = \frac{2E}{\eta}dt \quad (24)$$

For example

$$u = (E\varepsilon - \sigma) \quad (25)$$

$$du = -d\sigma \quad (26)$$

So,

ISBN : 978-623-91916-0-3
DOI : 10.5281/zenodo.3470873

$$-\frac{du}{u} = \frac{2E}{\eta}dt$$
$$\int_{u_0}^{u}\frac{du}{u} = -\frac{2E}{\eta}\int_{t_0}^{t}dt$$
$$\ln u - \ln u_0 = -\frac{2E}{\eta}t$$
$$\ln\frac{u}{u_0} = -\frac{2E}{\eta}t$$
$$\frac{u}{u_0} = e^{-\frac{2E}{\eta}t}$$
$$u = u_0 e^{-\frac{2E}{\eta}t} \quad (27)$$

Substitute equation (25) and (26) into (27).

$$E\varepsilon - \sigma = u_0 e^{-\frac{2E}{\eta}t} \quad (28)$$

$$u = (E\varepsilon - \sigma)$$
$$u_0 = 0 - \sigma_0 \quad (29)$$

Substitute equation (28) into (29), the stress relaxation equation (30) is obtained as follows.

$$E\varepsilon - \sigma = -\sigma_0 e^{-\frac{2E}{\eta}t}$$

$$\sigma = E\varepsilon + \sigma_0 e^{-\frac{2E}{\eta}t} \quad (30)$$

Equation (30)) can be write as exponential curve equation approach (31) bellow,

$$y = c + a_0 e^{-a_1 x}$$
$$y = a_0 e^{-a_1 x} + c \quad (31)$$

Where,

$y = \sigma$

$x = t$

$a_0 = \sigma_0$

$a_1 = \frac{2E}{\eta}$

To calculate the creep behavior with conditions $\frac{d\sigma}{dt} = 0$ the equation become as follows.

$$\frac{\eta}{2E}\frac{d\sigma}{dt} + \sigma = E\varepsilon + \frac{3}{2}\eta\frac{d\varepsilon}{dt}$$
$$0 + \sigma = E\varepsilon + \frac{3}{2}\eta\frac{d\varepsilon}{dt}$$
$$\frac{3}{2}\eta\frac{d\varepsilon}{dt} = \sigma - E\varepsilon$$
$$\frac{1}{E}\left(\frac{3}{2}\eta\frac{d\varepsilon}{dt}\right) = \frac{1}{E}(\sigma - E\varepsilon)$$

$$\frac{3\eta}{2E}\frac{d\varepsilon}{dt} = \frac{\sigma}{E} - \varepsilon$$
$$\frac{d\varepsilon}{\left(\frac{\sigma}{E} - \varepsilon\right)} = \frac{2E}{3\eta}\,dt \quad (32)$$

For Example,

$$u = \left(\frac{\sigma}{E} - \varepsilon\right) \quad (33)$$
$$du = -d\varepsilon \quad (34)$$

ISBN : 978-623-91916-0-3
DOI : 10.5281/zenodo.3470873

So,

$$\frac{du}{u} = -\frac{2E}{3\eta}\, dt$$

$$\int_{u_0}^{u} \frac{du}{u} = -\frac{2E}{3\eta} \int_{t_0}^{t} dt$$

$$\ln u - \ln u_0 = -\frac{2E}{3\eta}\, t$$

$$\ln \frac{u}{u_0} = -\frac{2E}{3\eta}\, t$$

$$\frac{u}{u_0} = e^{-\frac{2E}{3\eta}t}$$

$$u = u_0 e^{-\frac{2E}{3\eta}t} \qquad (35)$$

Substitute equation (33) and (34) into (35) as follows.

$$\frac{\sigma}{E} - \varepsilon = u_0 e^{-\frac{2E}{3\eta}t} \qquad (36)$$

$$u = \left(\frac{\sigma}{E} - \varepsilon\right)$$

$$u_0 = \left(\frac{\sigma}{E} - 0\right) \qquad (37)$$

Substitute equation (36) into (37) so that equation (38) is generated creep behavior as follows.

$$\frac{\sigma}{E} - \varepsilon = \frac{\sigma}{E} e^{-\frac{2E}{3\eta}t}$$

$$\varepsilon = \frac{\sigma}{E} - \frac{\sigma}{E} e^{-\frac{2E}{3\eta}t} \qquad (38)$$

Equation (30)) can be write as exponential curve equation approach (39) bellow,

$$y = a_0 - a_0 e^{-a_1 x} \qquad (39)$$

Where,

$y = \varepsilon$

$x = t$

$a_0 = \frac{\sigma}{E}$

$a_1 = \frac{2E}{3\eta}$

2. Materials and Methods

Materials

The material used in this research is 100% polyester yarn (36 Tex) which obtained from the stock of evaluation laboratory.

Methods

ISBN : 978-623-91916-0-3
DOI : 10.5281/zenodo.3470873

Before conducting stress relaxation testing and creep behavior, the tensile strength test was carried out using single yarn strength tester as the basis for determining the load to be used in creep behavior testing. The tensile strength of the test results is 1043 gf. Stress Relaxation testing is done by imitating the testing protocol of the journal IJFTR384375-379 using an tensile tester instron with an initial strain of 10% and a load of 500gf [11]. Data recording is done with an interval of 5 minutes for 1 hour. Creep Behavior testing is carried out by using a scaled holder with the test protocol following the journal IJFTR384375-379 with the rule of using pretension 0.5 cN cTex and loading 60% of its tensile strength [11], so that the pretension used in this test is 17.82 gf and the load used is 625.8 gf. Length increments (% strains) are recorded every 5 minutes in the 1 hour test period. Data fitting is done to predict modeling that matches the phenomena that occur. By looking at the forms of equations (30) and (38) for stress relaxation and creep behavior, data fitting is done using the exponential curve equation approach (31) for stress relaxation and (39) for creep behavior.

$$y = a_0 e^{-a_1 x} + c \tag{31}$$

$$y = a_0 - a_0 e^{-a_1 x} \tag{39}$$

3. Results

The stress relaxation test results are shown in Figure 3. with the value of R^2 = 0.7639 (closed), the equation or modeling produced can be used to predict stress relaxation in threads given a fixed load. The predictions are as follows.

$$\sigma = \sigma_0 e^{-\frac{2E}{\eta}t} + E\epsilon$$
$$y = a_0 e^{-a_1 x} + c$$
$$\sigma = 1.45 e^{-1.6t} + 10.38 \tag{40}$$

From equation (40) the value is obtained,

E = 0.554 (cN/tex %)

η =0.64 (cN minute/tex %)

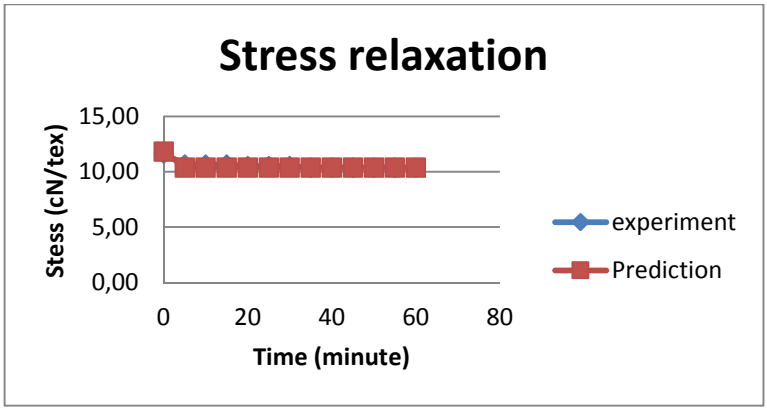

Figure 3. The comparison of stress relaxation graphs between experiment and prediction uses exponential curve data fitting

ISBN : 978-623-91916-0-3
DOI : 10.5281/zenodo.3470873

Table 1, calculation of R^2 for stress relaxation model

No	x time (minute)	Y Stress (cN/Tex) Experiment	Y Stress (cN/Tex) Prediction	(Y Pred -Y Exp)²	(Y avg exp - Y exp)²
1	0	11.64	11.82868	0.0352412	1.1407872
2	5	10.66	10.37917	0.0784113	0.0074493
3	10	10.66	10.37868	0.0786838	0.0074493
4	15	10.66	10.37868	0.0786839	0.0074493
5	20	10.52	10.37868	0.0196712	0.0029099
6	25	10.52	10.37868	0.0196712	0.0029099
7	30	10.52	10.37868	0.0196712	0.0029099
8	35	10.38	10.37868	0.0000000	0.0377120
9	40	10.38	10.37868	0.0000000	0.0377120
10	45	10.38	10.37868	0.0000000	0.0377120
11	50	10.38	10.37868	0.0000000	0.0377120
12	55	10.38	10.37868	0.0000000	0.0377120
13	60	10.38	10.37868	0.0000000	0.0377120
Sum	390.00	137.45	0	0.330033824	1.398136454
Average	30.00	10.57			
				R^2	0.7639

The results of the creep behavior test are shown in Figure 4. with the value of R^2 = 0.9997 (closed), the equation or modeling produced can be used to predict the creep behavior of threads which are given a fixed load, and the prediction equation is obtained, as follows.

$$\varepsilon = \frac{\sigma}{E} - \frac{\sigma}{E} e^{-\frac{2E}{3\eta}t}$$

$$y = a_0 - a_0 e^{-a_i x}$$

$$\varepsilon = 20.05 - 20.05e^{-1.2t} \quad (41)$$

From equation (41) the value is obtained,

E = 0.89(cN/tex %)

η =0.49 (cN minute/tex %)

ISBN : 978-623-91916-0-3
DOI : 10.5281/zenodo.3470873

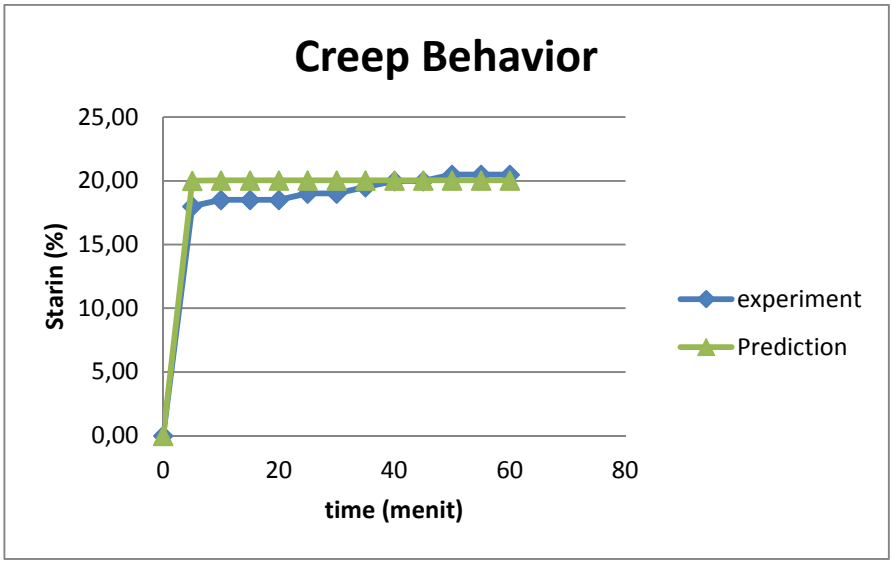

Figure 4. The comparison of creep behavior graphs between experiment and prediction uses exponential curve data fitting

Table 2. Calculation of R^2 for creep behavior model

No	x time (minute)	Y Stress (cN/Tex) Experiment	Y Stress (cN/Tex) Prediction	$(Y\ Pred - Y\ Exp)^2$	$(Y\ avg\ exp - Y\ exp)^2$
1	0	11.64	11.82868	0.0352412	1.1407872
2	5	10.66	10.37917	0.0784113	0.0074493
3	10	10.66	10.37868	0.0786838	0.0074493
4	15	10.66	10.37868	0.0786839	0.0074493
5	20	10.52	10.37868	0.0196712	0.0029099
6	25	10.52	10.37868	0.0196712	0.0029099
7	30	10.52	10.37868	0.0196712	0.0029099
8	35	10.38	10.37868	0.0000000	0.0377120
9	40	10.38	10.37868	0.0000000	0.0377120
10	45	10.38	10.37868	0.0000000	0.0377120
11	50	10.38	10.37868	0.0000000	0.0377120
12	55	10.38	10.37868	0.0000000	0.0377120
13	60	10.38	10.37868	0.0000000	0.0377120
Sum	390.00	232.50		14.32832134	46059.76331361
Average	30.00	17.88			
				R^2	0.9997

4. Discussion

ISBN : 978-623-91916-0-3
DOI : 10.5281/zenodo.3470873

In general, the results of predictions both stress relaxation and creep behavior equations after being tested for correlation both have close values. In general, stress relaxation and creep behavior can be predicted using equations (40) and (41).

From equation (40) and (41) each obtained the elastic modulus (E) and viscous (ŋ) values that are not exactly the same between stress relaxation and creep behavior conditions. After reviewing it, the authors suspect that this is due to the limitation of the value of E which is considered $E_1 = E_2 = E_3 = E$, which could be the actual condition of the thread not like that. However, to predict and model stress relaxation and creep behavior equations (40) and (41) can be used.

5. Conclusions

From this research, it can be concluded that simple modeling using data fitting method can be used to predict stress relaxation and creep behavior of polyester yarn as viscoelastic material. The modeling obtained for the stress behavior is in equation (40) and modeling for creep behavior is found in equation (41).

References

1. Chen, X (2010) ,Modelling and Predicting Textile Behaviour, Woodhead Publishing in Textiles (CRC Press)
2. Ferry J D (1970), Visco-elastic properties of polymers, John Wiley, New York, USA.
3. Ward I M (1983), Mechanical Properties of Solid Polymers 2nd edn (John Wiley, New York),
4. Tobolsky, A. V., & Andrews, R. D. (1945). Systems Manifesting Superposed Elastic and Viscous Behavior. The Journal of Chemical Physics, 13(1), 3–27. doi:10.1063/1.1723966
5. Halsey G, White H J and Eyring H (1945), 'Mechanical properties of textiles', Text. Res. J., 15, 295–311.
6. Gupta, V. B., & Kumar, S. (1977). A Model for Nonlinear Creep of Textile Fibers. Textile Research Journal, 47(10), 647–649. doi:10.1177/004051757704701002.
7. Saber M, Saber B A & Sakli F ((2009), Journal of Applied Sciences,Vol 9 page 2794.
8. Zhuan Y Z & Cheng L D (2009), Journal of Fiber Bioengineering and Informatics vol 2 page 197.
9. Charles J G, Reichardt C H & Halsey G, J Appl Phys,19 (1948) 464.
10. Roylance D & Wang S S,Polym Eng Sci, 18 (1978) 1068.
11. Morton W E & Hearle J W S (1993), Physical Properties of Textile Fibres, 3rd edn (The Textile Institute, Machester, UK).
12. Ghosh, A., Das, S., & Banerjee, D. (2018). Simulation of yarn stress relaxation and creep behaviors using genetic algorithm.

ISBN : 978-623-91916-0-3
DOI : 10.5281/zenodo.3470873